Brand	hansgrohe
Art. Name	**Crometta E** Showerpipe 240 1jet with single lever mixer
Art. Nr.	27284000
Surface	Chrome

Product picture

Drawing

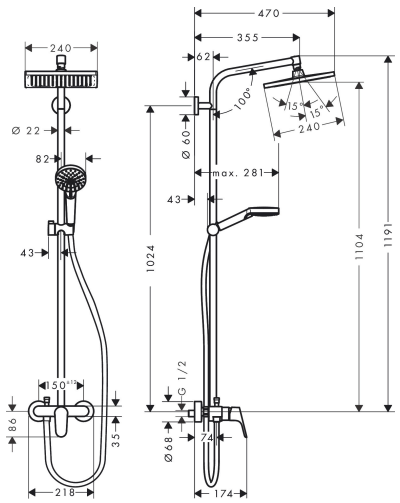

Features

- consists of: overhead shower, hand shower, single lever shower mixer, shower hose, slider, shower bar
- overhead shower Crometta E 240
- shower head size overhead shower: 240 x 240 mm
- spray type overhead shower: Rain
- spray disc surface: chrome
- flow rate Rain spray at 3 bar: 15 l/min
- spray type hand shower: Rain, IntenseRain
- maximum flow rate of hand shower at 3 bar: 13 l/min
- maximum flow rate for Showerpipe at 3 bar: 15 l/min
- minimum flow pressure: 1,8 bar
- max. operating pressure: 10 bar
- ball-joint: overhead shower angle adjustable
- slide inclination angle can be adjusted by 45°
- pipe can be shortened in height
- shower bar diameter: 22 mm
- height-adjustable hand shower holder
- shower arm length overhead shower: 350 mm
- suitable for continuous flow water heaters with an output of 18 kW
- mounting type: exposed installation
- connection dimension: DN15
- connection thread: G ½
- centre distance: 150 ± 12 mm
- ceramic cartridge

Technology

Spray Types

Certificates

EPD

Brand	hansgrohe
Art. Name	**Crometta E** Showerpipe 240 1jet with single lever mixer
Art. Nr.	27284000
Surface	Chrome

Flow chart

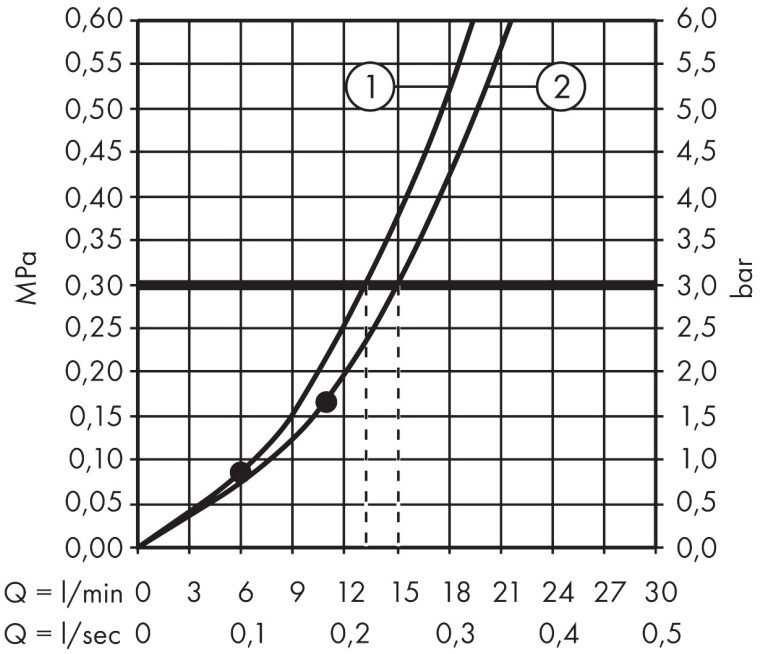

Brand	hansgrohe
Art. Name	**Crometta E** Showerpipe 240 1jet with single lever mixer
Art. Nr.	27284000
Surface	Chrome

Installation examples

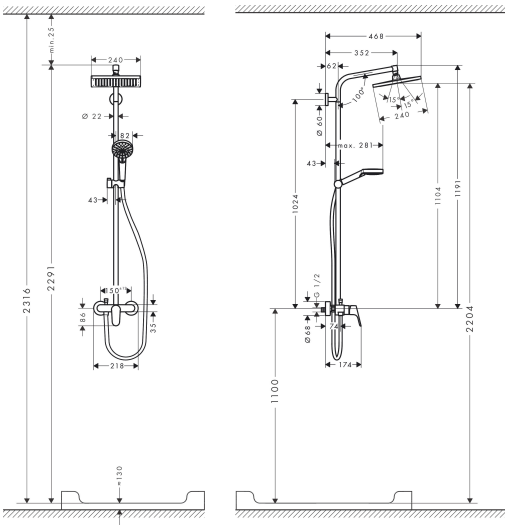

Dimensions may vary due to ceramic tolerances related to the production process.